ARMATURA

AMT-FAPVS-30

Dual-Lens Multimodal Standalone Module for Face and Palm Recognition

AMT-FAPVR-30

Dual-Lens Multimodal Standalone Reader for Face and Palm Recognition

Overview

- The key feature highlights of the Armatura 30 series multimodal biometric modules:
- Highly adaptive standalone touchless face and palm recognition modules for a wide range of applications.
- Common core board which offers 2.4 TOPs of computing power for AI.
- Dual camera technology to capture high resolution infrared light and RGB images of face and palm.
- Auto exposure on region of interest to capture high-quality face and palm image to ensure recognition accuracy.
- Supports UVC video stream and HID data communication protocols.
- Built-in face and palm recognition algorithms for full-cycle biometric recognition.
- AI-based high-accuracy liveness detection algorithm to prevent spoofing attack.
- Large volume flash storage with support for up to 30,000 face templates and 5,000 palm templates.
- Lightweight, compact design with developer-friendly interfaces for easy integration with hardware and software applications.
- Currently available modules include:
  - AMT-FAPVS-30 standalone multimodal module for built-in integration.
  - AMT-FAPVR-30 standalone multimodal reader for direct connection.

Software Development Kit (SDK)

- Armatura 30-series biometric modules are supported by Armatura MultiBio SDK v3.0.
- MultiBio SDK 3.0 supports Windows, Android operating system. Linux version is supported on request.
- MultiBio SDK 3.0 simplifies the hardware communication through standard UVC and HID protocols by the operation system and provides programming interfaces to access module's built-in face and palm algorithm.
- MultiBio SDK 3.0 offers face and palm on host matching libraries as well.
- MultiBio SDK 3.0 provides developers and integrators with a quick and easy integration approach.

Module Dimensions and Connection PIN Specifications

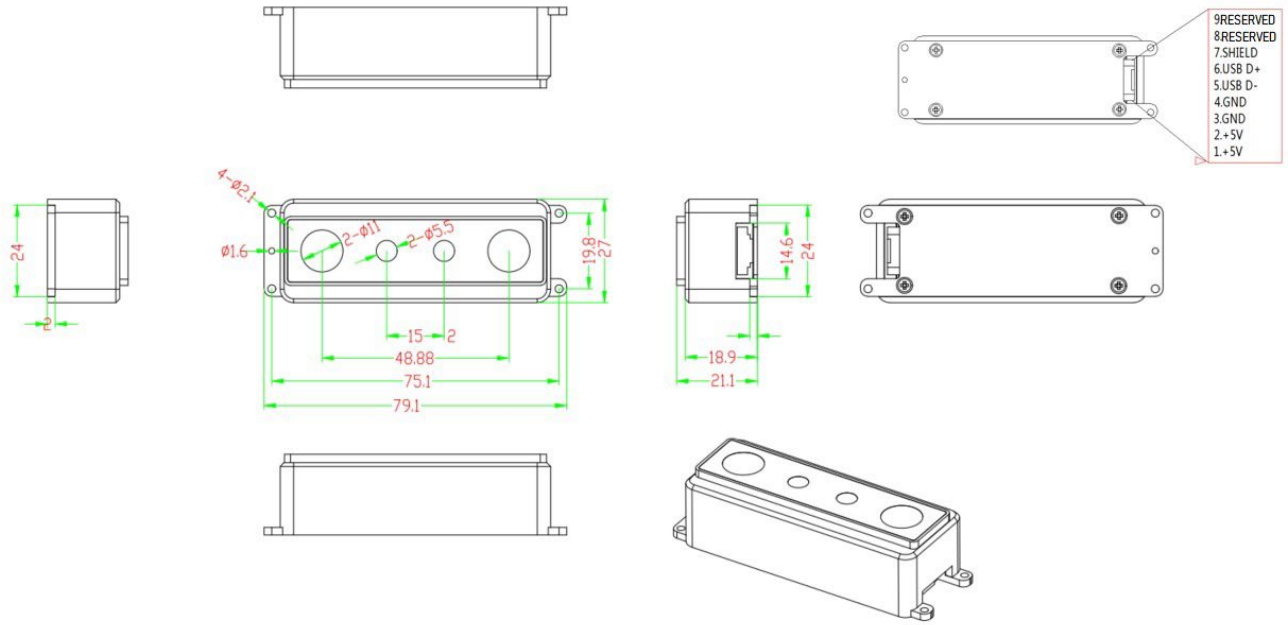

Fig 1: AMT-FAPVS-30 3D Structure Diagram and PINOUT specs (Unit: mm)

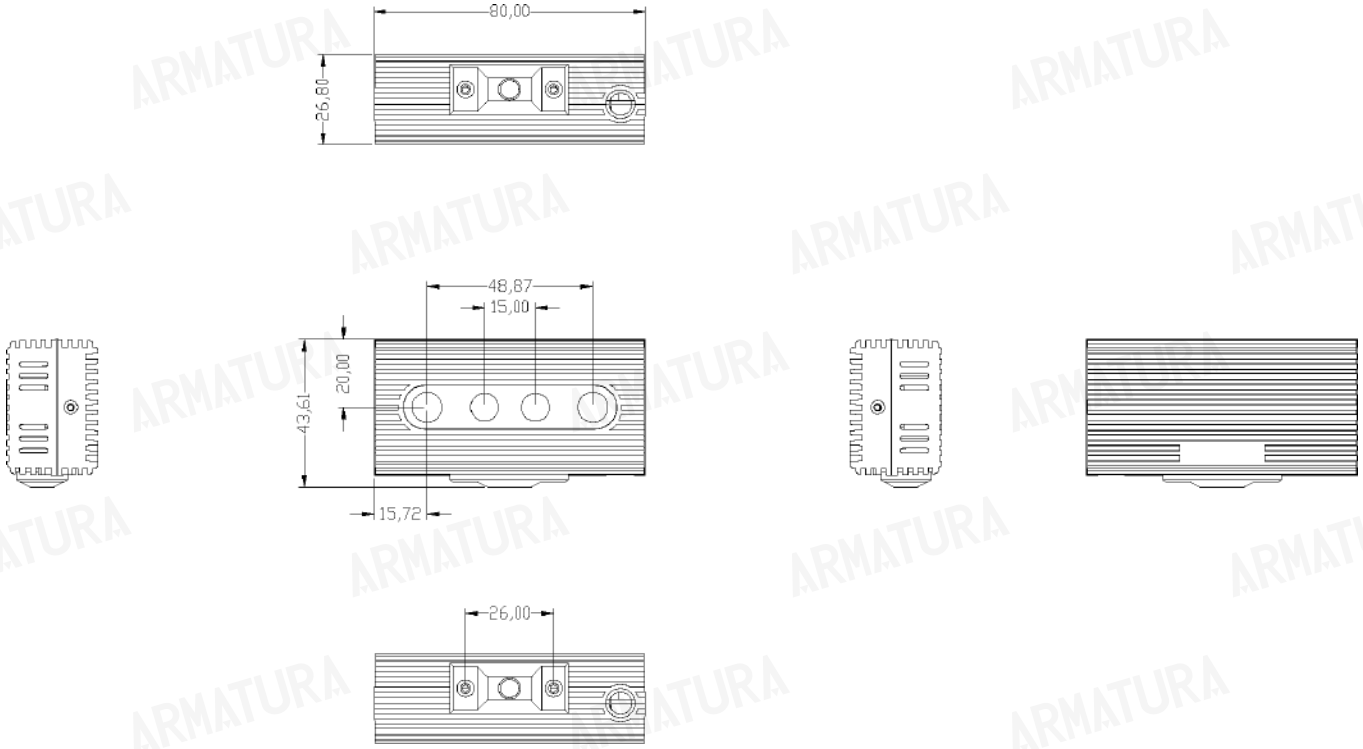

Fig 2: AMT-FAPVR-30 3D Structure Diagram (Unit: mm)

General Information	
Processor	1.2GHZ Quad Core ARM Processor, 2.4 TOPS NPU
Memory	1 GB RAM and 512MB Flash
Camera	1.3 MP Infrared light camera; 2.0 MP visible light camera
Interface	USB 2.0
Communication	UVC and HID Protocol
Power Supply	DC 5.0V/2.0A
Power Consumption	< 2.5W (standby); < 3.5 W (operation)
Operating Temperature	-10°C ~ 55°C / 14°F ~ 131°F
Storage Temperature	-40°C ~ 85°C / -40°F ~ 185°F
Operating Humidity	15% ~ 95% RH
Dimension	AMT-FAPVS-30: 79.1L x 27.0W x 21.1H (mm)
	AMT-FAPVR-30: 80.0L x 40.0W x 26.0H (mm)
Certifications	CE, FCC, RoHS

Sensor		
Camara Type	Visible Light Camera	Infrared Light Camera
CMOS	1/2.8” HDR CMOS, 2.0MP	1/4” CMOS, 1.3MP
Dynamic Range	HDR mode 106dB	N/A
Optical Wavelength	440 nm ~ 650 nm	940 nm
Image Type	24-bit RGB true color	256 Grayscale Levels
Illumination Range	0.01 Lux to 50,000 Lux	0.01Lux to 20,000Lux
Exposure Mode	Auto Expose on Region of Interest (AE on ROI)	Auto Expose on Region of Interest (AE on ROI)
Image Resolution (Pixel)	Raw: 1080W * 1920H	Raw: 1080W * 1280H
	Output: 720W * 1280H	Output: 720W * 1280H
Shutter Type	Rolling shutter	Global shutter
Frame of View (FOV)	Horizontal: 60°, Vertical 36°, Diagonal: 67°	
Frame per second	15	
Distortion Rate	≤ 0.5%	

Built-In Algorithms		
Biometric Type	Face	Palm
Recognition Distance	40cm – 120 cm	18cm - 40cm
Posture Adaptability (by Default)	Yaw ≤ 30°, Pitch ≤ 30°, Roll ≤45°	Yaw ≤ 45°, Pitch ≤ 30°, Roll ≤ 90°, Bend ≤ 30°
Accuracy	*TAR=99%@FAR=0.01%	*TAR=98.7%@FAR=0.01%
Recognition Mode	1:1, 1:N	
Recognition Speed	< 100ms	< 140ms
Face Attribute	Age, Gender, Expression classification	N/A
Liveness Detection	Infrared-visible light mode; Infrared light mode	Infrared light mode
Face Mask Detection	Yes	N/A
Capacity On Module	30,000	5,000

Notes:
* TAR:True Accept Rate
* FAR: False Accept Rate
* The performance test is based on the Armatura proprietary face and palm datasets.

www.screencheckindia.com

SCREEN CHECK®

Authorized Distributor of

ARMATURA

ScreenCheck India, a Centena group company, is a one-stop solution provider of identity and security in India. Screencheck provides individual as well as end-to-end integrated solutions for

- ID Card Issuance
- Attendance Management
- Access Control
- CCTV Solutions
- A.I Enhanced Security Systems
- Security Inspection
- Parking Barriers & Solutions

and other innovations that meet 21st-century security requirements. The unique solutions are catered to Government, Corporate, Educational, Manufacturing, Retail and other major industries across India. The global domain expertise built over these years has made Screencheck the entrusted identification and security solutions partner in the region.

SCREENCHECK INDIA PVT LTD

Registered Office
Chennai
KRM Tower, No. 1,
8th Floor Harrington Road,
Chetpet, Chennai,
Tamil Nadu-600031

Pan India no:
+91 8130078843

Write to us:
info.scin@centena.com